WABCO

SERVICE MANUAL **5032**

Styles "P-5" and "TP-5"
COLOR LIGHT
SIGNALS

INSTALLATION AND MAINTENANCE

March, 1980
B-79-750-2311-2

PRINTED IN U.S.A.

UNION SWITCH & SIGNAL DIVISION
AMERICAN STANDARD INC.
Swissvale, PA 15218

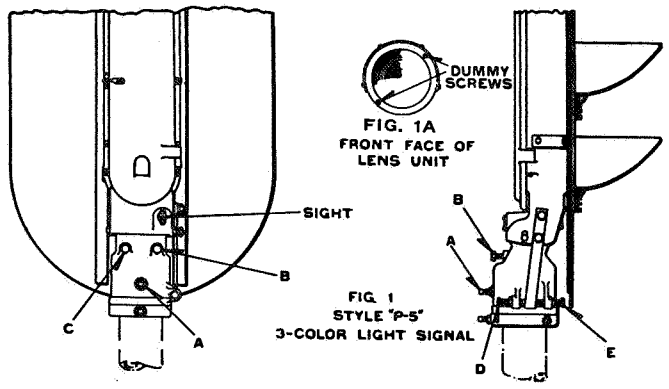

Alignment:

First align the signal horizontally by loosening set screws "A" and revolve the signal head Fig. 1 by means of screws "B" and "C" until the vertical hair in the "Sight" intersects the track at the point where the engineman should first pick up the indication. With the signal in this position, set screw "A" with its lock nut and screws "B" and "C", should be tightened. Check the alignment to insure that it has not been changed by the tightening of these screws. The signal should then be adjusted vertically by means of screws "D" and "E" until the horizontal hair in the "Sight" intersects the predetermined point on the track where the engineman should first pick up the indication.

After securely locking both the horizontal and vertical adjustments, check the alignment to insure that it has not changed.

Alignment on Curves:

Standard Style "P-5" Light Signals are designed to produce a concentrated light beam for long range indication on tangent track or track of slight curvature.

Special "Deflecting Prisms" can be furnished when additional spread is required to properly signal track of greater curvature. See Instruction Pamphlet U-5452 for use of these cover glasses and for alignment of signals on curves.

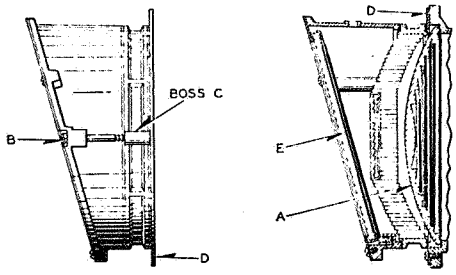

FIG. 2

When Phankill units are furnished they are combined with the inclined cover glass assembly as shown in Fig. 2. This assembly is mounted in front of the standard lens "A" by means of two screws "B" on the horizontal center line. These screws are threaded into bosses "C" of the special lens ring "D" which is used to replace the regular front lens ring on the signal. In this assembly, a plain cover glass "E" is used for tangent track; a "Deflecting" or a "Spreadlight" cover glass is used for curves.

Close-up Prisms:

The Style "P-5" and "TP-5" Light signal lens units are equipped with special prisms for close-up indication, located between the lenses. These are used to provide an indication in the line of sight of an engineman in a locomotive cab when he approaches the signal and after he has passed out of the limits of the spread of the main beam. Fig. 3 shows a close-up prism and indicates the direction the light is deflected with reference to the prismatic formations on the glass. This view also shows the word "top" molded in the rim of the glass and the direction arrow.

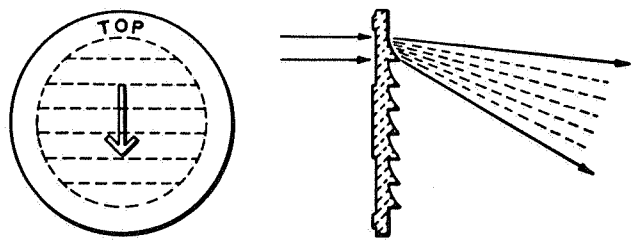

FIG. 3

Since signals are located at various heights and distances from the track, it is impossible to adjust the close-up prism at the factory for all conditions of installation. However, to produce the indication at a point most easily found by the installing forces in the field, the prism is adjusted at the factory to produce the close-up indication vertically downward. The installation forces should readjust the indication to meet local conditions.

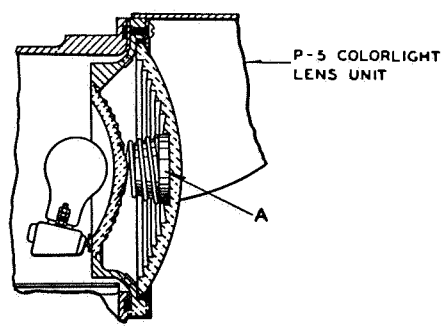

FIG. 4

Figure 4 shows the location and assembly of the close-up prism in the lens unit. To gain access to the prism, it is necessary to remove the inner, or colored, lens. The edge of the inner lens has a small "V" notch molded in. This notch is carefully lined up at the factory with a similar notch in the lens unit housing. When returning the inner lens to the housing, care must be exercised to see that these two notches are again lined up. The close-up prism is positioned in the center "bull's eye" section of the outer lens and can be rotated by hand in this section. When installing the inner lens, care must be maintained to see that the prism assembly is firmly seated in the front lens, and that the coil spring fits into the bull's-eye of the inner lens. Any modification of the lens adjustment or change of lenses destroys the efficiency established by the factory adjustment.

In signals equipped with cover glasses and "Phankill" units, the close-up prism is located in the center of the Phankill screen as shown in Fig. 2. When this assembly is added to a signal, the close-up prism assembly furnished with the signal must be removed. To adjust the close-up when assembly Fig. 2 is used, loosen but do not remove the two screws, "B". Rotate the entire "Phankill" unit until the indication is observed at the desired point as described below and then tighten the two screws.

Adjustment of Close-up Prism:

To adjust the close-up indication, an observer should be stationed in a locomotive cab at a distance of 40 feet from the signal as indicated by point "X" Fig. 5. Although signals are located at various heights and distances from the track, the location of point "X" in advance of the signal is satisfactory for all customary signal installations. Point "X" is 12′ above the rail and is the approximate height of an engineman's eye. If a locomotive is not available, some other device which will place the observer's eye at point "X" may be used. To adjust the indication, rotate the prism until a maximum indication is observed at "X". It will, of course, be necessary to replace the inner lens and lamp to make each observation.

For ground signals located 12 feet above the rail, the close-up prism must be turned to direct the indication approximately horizontal in order to be in line with point "X" as shown in the lower view, Fig. 5. For other signals, located at greater heights, such as the upper unit, the close-up prism will not require as much rotation away from the factory setting as will the lower signals.

Lamp Renewals:

Style "P-5" lamps are accurately rebased to insure that the filaments will be at the exact focal point when the lamps are applied in the field. Thus, when lamps are renewed, the long range indications are maintained without need of any readjustments.

In replacing lamps, care must be exercised to assure that the pins in the lamp base are turned to the end of the slot in the receptacle and forced up into their seats by the contact spring. This is necessary to place the filament in its correct location.

If non-precision lamps, having filaments appreciably off the true location, are used, not only will the signal indication be impaired, but the alignment of the light beam may not be parallel to the sighting device and, therefore, not pointing in the direction indicated. For best results, therefore, it is desirable that accurately rebased lamps be used.

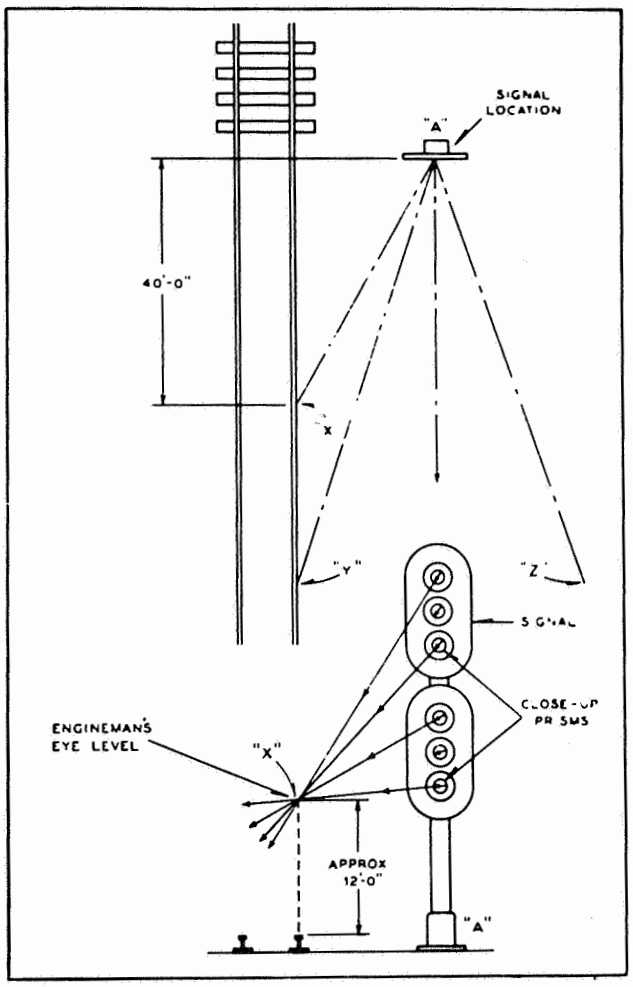

FIG. 5

Voltage of Lamps:

For information on lamps, their handling and recommended voltage, refer to U. S. & S. Instruction Pamphlet 5037.

Lens Units:

The optical system of the Style "P-5" and "TP-5" Light Signals is made up in the form of complete and self-contained lens units. In case of breakage of either of the lenses or damage to the lamp receptacle, best results can be obtained if the complete lens unit is replaced and returned to the factory for repairs. Lenses may be replaced in the field although several lenses may have to be tried in the signal before a satisfactory indication can be obtained. A colored inner lens should never be replaced by a lens of different color without having the lamp socket relocated at the factory.

Lens units are interchangeable in the field without need of any readjustments or realignment of the signal. Correct focusing of the units is taken care of at the factory.

To replace a lens unit, disconnect the wire leads from the lamp receptacle, take out the two cap screws that hold the unit to the outer flange of the signal casting and remove the unit complete with lenses, lamp receptacle and hood from the front of the signal case. Clean the front surface of signal case if necessary in order that the new unit will properly seat. This is to insure that the unit will not be tilted and result in throwing the lightbeam in a direction differing from that of the other units in the signal case.

Cleaning Lenses:

Smoke and dust that collect on the exposed surface of the outside lens should be cleaned off from time to time in order to maintain normal range of the signal.